Type C2 Seat Type Solenoid Pilot Valve

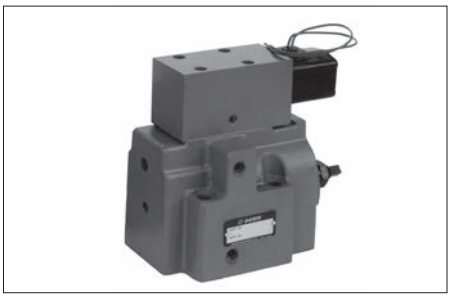

JIS graphic symbols for hydraulic system

C2SL	C2SLT
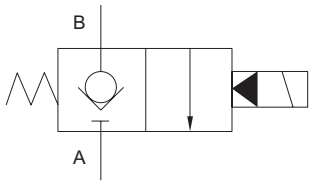	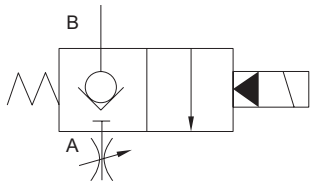

Features

- No hydraulic locking occurs even during long periods of pressurized operation

Nomenclature

※	-	C2SL	※	-	G	※※	-	※※	※	-	10	-	※	※	※
1		2	3		4	5		6	7		8		9	10	11

1 Applicable fluid code
No designation: Petroleum-based hydraulic fluid
F: Phosphate ester hydraulic fluid

2 Model No.
C2SL: Type C2 seat type solenoid pilot valve

3 Compound function
No designation: Without throttle function
T: With throttle function

4 Connections
G: Gasket mount type

5 Nominal diameter
03: ⅜
06: ¾

6 Cracking pressure code
03: 0.05 MPa {0.5 kgf/cm^2} at flow B → A
10: 0.17 MPa {1.7 kgf/cm^2} at flow B → A

7 Voltage code for the solenoid valve
A: AC 100 V (50/60 Hz), AC 110 V (60 Hz)
B: AC 200 V (50/60 Hz), AC 100 V (60 Hz)
P: DC 24 V

8 Design No.
(The design No. is subject to change)

9 Cartridge valve option code *1
No designation: Standard cartridge valve type
K: Shockless cartridge valve type

10 Option code *2
No designation: Standard adjusting screw type
D: Digital handle type

11 Solenoid pilot valve option code
No designation: Lead wire type
C: DIN connector type (without lamp)
CL: DIN connector type (with lamp)

Note: *1 Applicable only to C2SL (without throttle function)
*2 Applicable only to C2SLT (with throttle function)

Specifications

Model No.	Nominal diameter	Maximum operating pressure MPa {kgf/cm²}	Maximum flow rate L/min	Maximum switching frequency Times per minute	Leak amount cm³/min	Cartridge area ratio *3	Cartridge drainage volume *4 cm³		Mass kg
							(1)	(2)	
C2SL※-G03	⅜	25 {250}	200	240	0.25 maximum	AA:AF = 1:1.6	1.5	2	5.2
C2LS※-G06	¾		500				3.5	5	8

Note: *3 Area at port A (AA) : Area at port F (AF)
*4 Cartridge drainage volume (1) Model code: C2SL
(2) Model code: C2SLT, C2SL-K

Refer to JSC-※01 on Page G-82 for the solenoid specifications.

Accessories

Model No.	Hexagon socket head cap bolt	Quantity	Tightening torque N·m {kgf·cm}
C2SL※-G03	M10 × 60	4	51 to 68 {510 to 680}
C2SL※-G06	M10 × 75	4	51 to 68 {510 to 680}

Sub-plate model code

- The sub-plate is not provided with the valve. Order it separately if required by specifying the model code given in the table below.

Model code	Nominal diameter	Connection port diameter	Mass kg
JGB-03M	3/8	Rc3/8	1.6
JGB-03M04		Rc1/2	
JGB-06M	3/4	Rc3/4	3.9
JGB-06M08		Rc1	

Refer to Page S-6 for the dimensions of the sub-plate.

Handling

- **Flow A → B cannot be utilized with the solenoid either energized or demagnetized.**
- **Flow rate adjusting method (with C2SLT energized)**
  - ○ Turning the flow rate adjusting screw counterclockwise increases the flow rate.
  - ○ Since a large force will be required to operate the flow rate adjusting screw when the pressures at ports A and B increase, adjust the flow rate at 10 MPa {100 kgf/cm^2} maximum.
  - ○ The flow rate will not be zero even when the flow rate adjusting screw is fully tightened. See the minimum control flow rate characteristics.
- **Adjusting response at switching**
  - ○ Adjustment using the fixed throttles
    The response can be adjusted by changing the responsive adjusting fixed throttles (NPTF1/16).
    At shipment, the product is not equipped with fixed throttles.
    If you require fixed throttles, order them separately by referring to the model codes below.
    Model code: T1-16-※※ (※※: Throttle diameter code) Tightening torque: 6 to 7.5 N·m {60 to 75 kgf·cm}

Throttle diameter code	06	07	08	09	10	12	14	16	18	20	25
Fixed throttle diameter	ϕ0.6	ϕ0.7	ϕ0.8	ϕ0.9	ϕ1	ϕ1.2	ϕ1.4	ϕ1.6	ϕ1.8	ϕ2	ϕ2.5

  - ○ Adjustment using the pilot throttle valve
    To control the opening speed and closing speed of the valve separately, stack size 02 stack valves below the solenoid pilot valve. When using stack valves, order mounting bolts separately by referring to the table below since the mounting bolts required differ depending on the stacking height.

	Opening speed adjustment	Closing speed adjustment	Opening/closing speed adjustment
Stack valve model code	MT-02B-55	MT-02Bi-55	MT-02B-55, MT-02Bi-55
Hexagon socket head cap bolt	M5 × 90		M5 × 130
Quantity	4		4
Tightening torque N·m {kgf·cm}	6 to 8 {60 to 80}		

- **Shocks at switching can be suppressed by using the shockless cartridge valve type (option code: K).**

Performance curves (viscosity: 32 mm²/s {cSt})

● C2SL※-G03

Pressure drop characteristics
C2SL

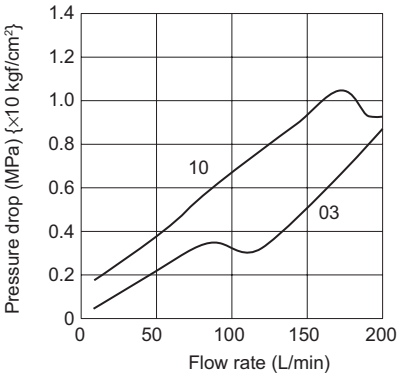

Pressure drop characteristics
C2SL-K, C2SLT

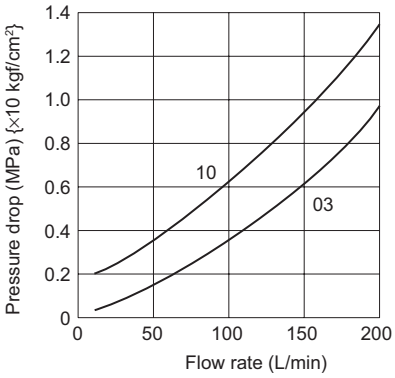

Adjusting screw revolution - Flow rate characteristics
With C2SLT energized

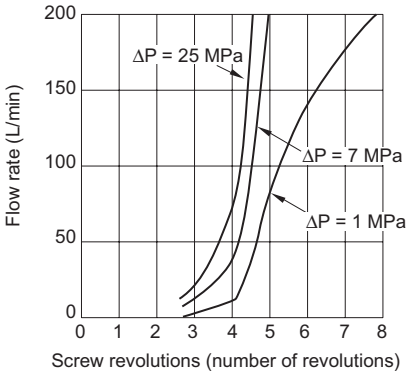

Minimum control flow rate characteristics
With C2SLT energized

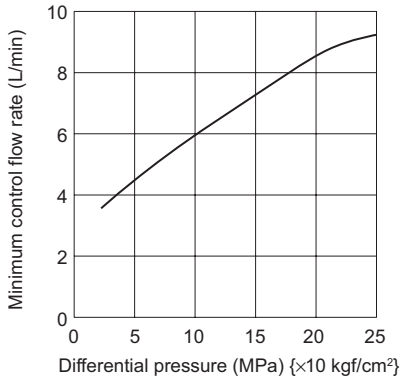

Response (closing time) *5

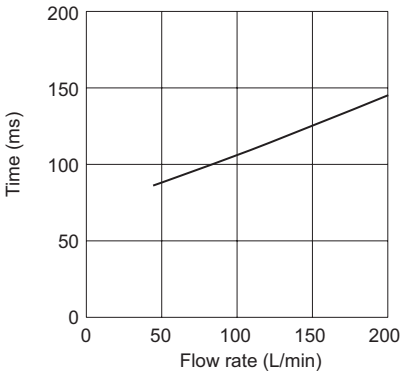

Response (opening time)

Power supply	Opening time (sec)
AC	0.025 to 0.035
DC	0.035

Note:
*5 With the pressure at port B set at 25 MPa {250 kgf/cm²} when demagnetized and the port A vent to the tank for C2SL-G03-10P-10
*5 The closing time may change slightly depending on the differential pressure.

● C2SL※-G06

Pressure drop characteristics
C2SL

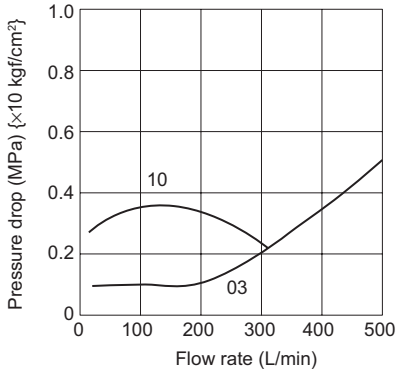

Pressure - Flow rate characteristics
C2SL-K, C2SLT

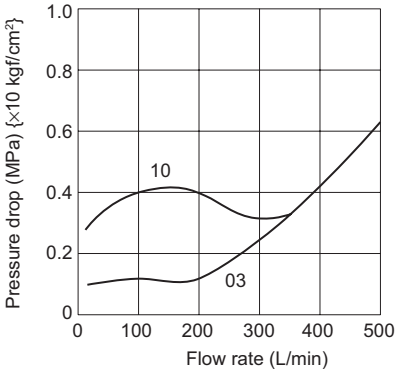

Adjusting screw revolution - flow rate characteristics
(With C2SLT energized)

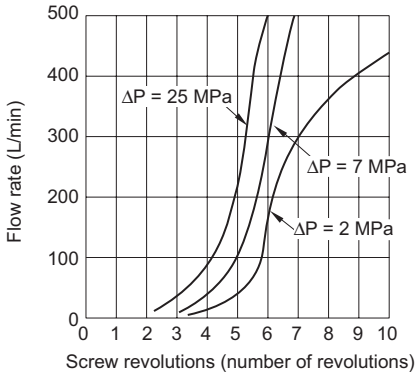

Minimum control flow rate characteristics
(With C2SLT energized)

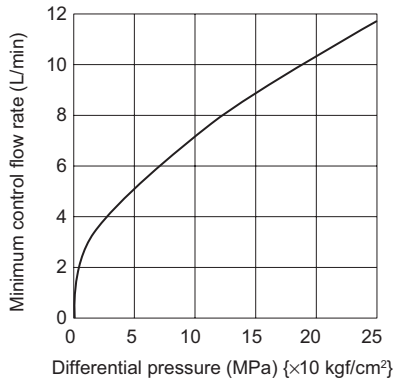

Response (closing time) *6

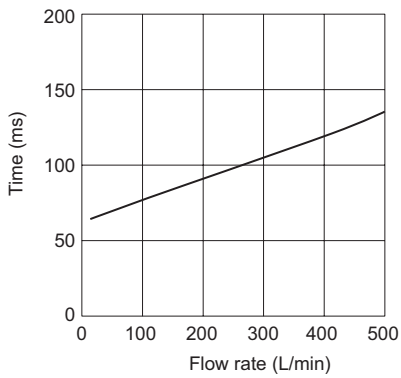

Response (opening time)

Power supply	Opening time (Sec.)
AC	0.025 to 0.035
DC	0.035

Note:
*6 With the pressure at port B set at 25 MPa {250 kgf/cm²} when demagnetized and the port A vent to the tank for C2SL-G06-10P-10
*6 The closing time may change slightly depending on the differential pressure.

External dimension diagram

● C2SL(T)-G03, 06

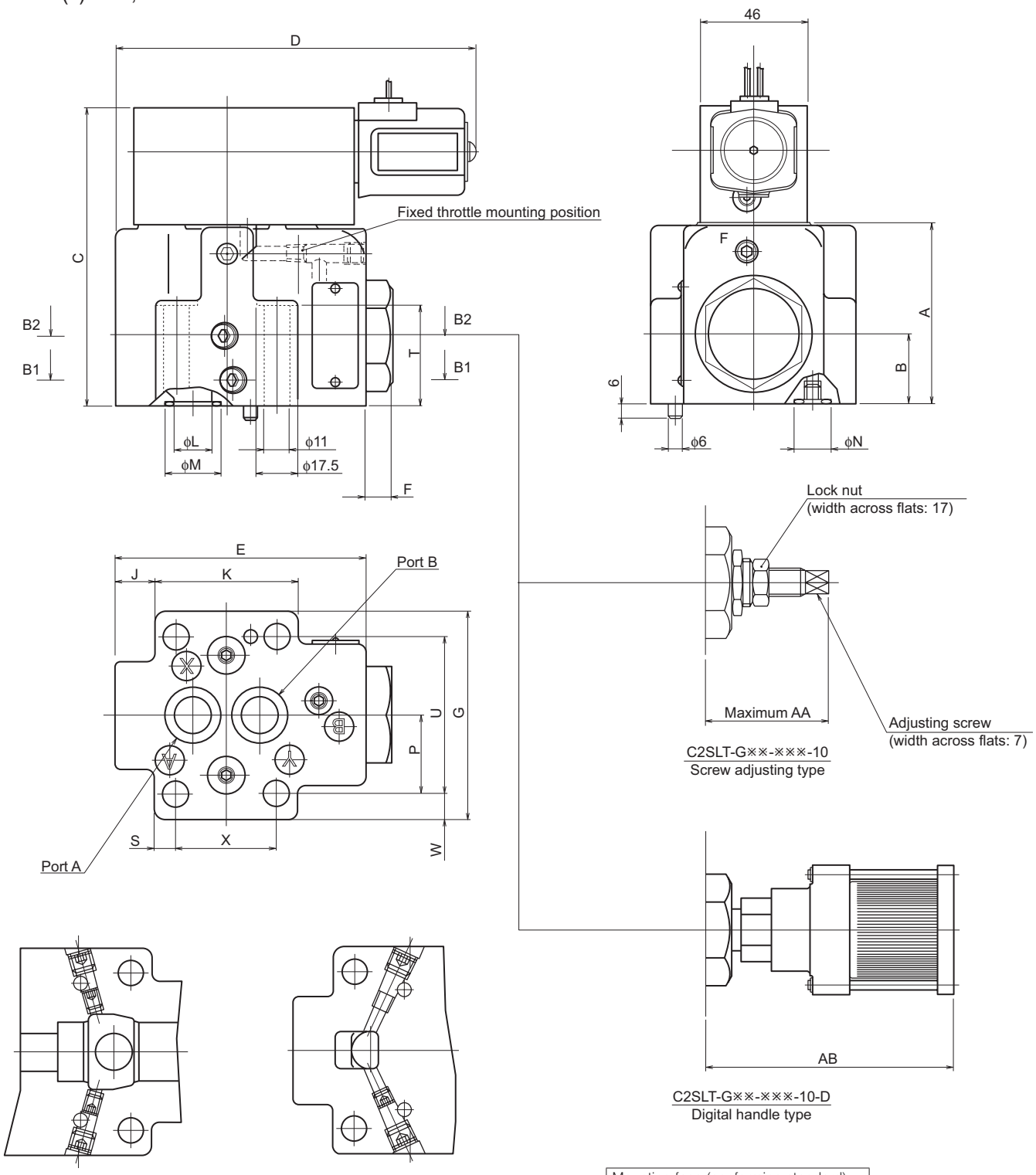

Mounting face (conforming standard)
C2SL(T)-G03: ISO 5781-06-07-0-00
C2SL(T)-G06: ISO 5781-08-10-0-00

Model No.	Dimensions													
	A	B	C	D	E	F	G	J	K	L	M	N	P	U
C2SL(T)-G03	77	30	77	153.5	107	11	88	15	61	16	24	16	33.3	66.7
C2SL(T)-G06	95	40	145	164	127	14	102	14	82	24	34	16	39.7	79.4

Model No.	W	S	T	X	AA	AB
C2SL(T)-G03	10.65	9.05	44	42.9	48	106
C2SL(T)-G06	11.3	10.85	59	60.3	60.5	107

Sectional structural diagram

● C2SL-G03, 06

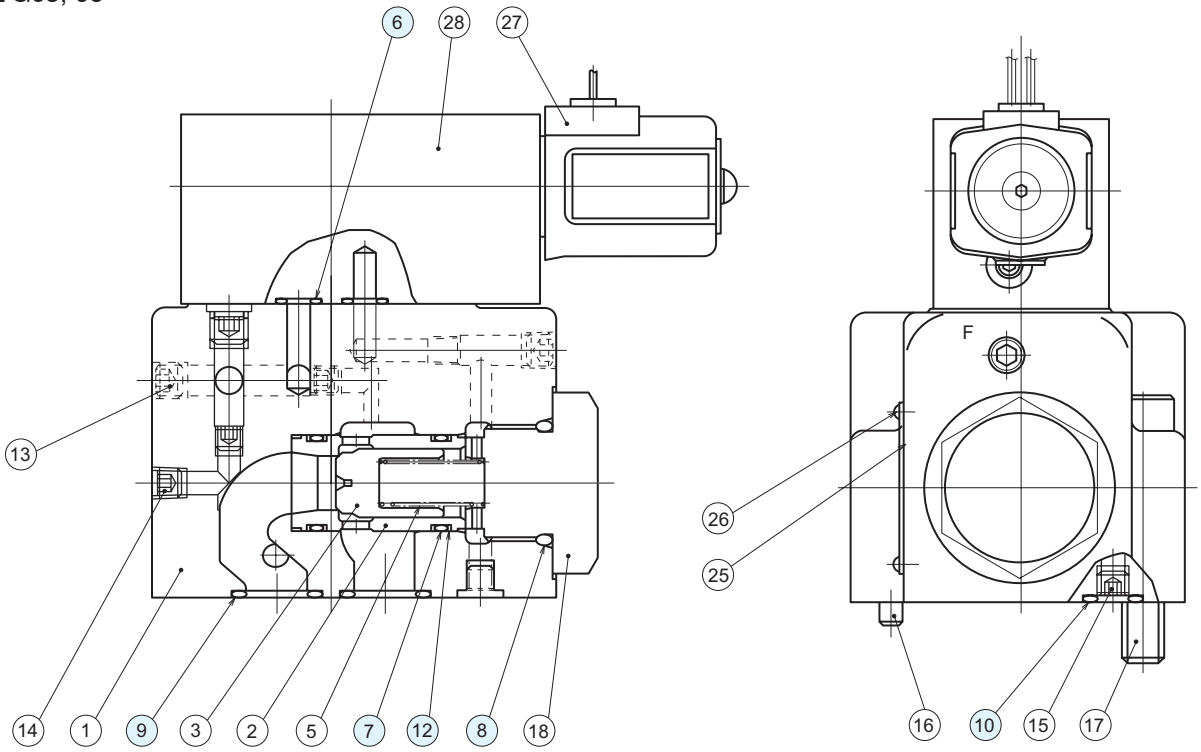

● C2SLT-G03, 06

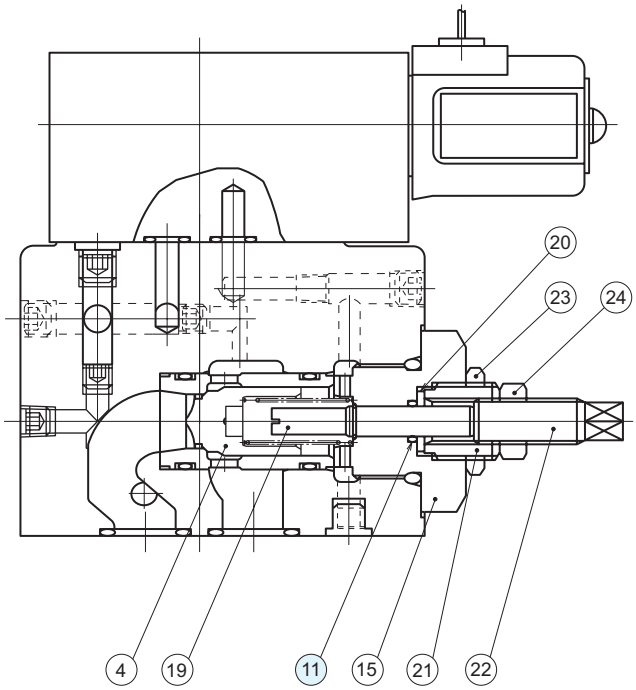

Sealing part table

Part No.	Name	C2SL (T) -G03		C2SL (T) -G06	
		Quantity	Part specifications	Quantity	Part specifications
6	O-ring	4	JIS B 2401 1B P9	4	JIS B 2401 1B P9
7	O-ring	2	AS568-020 (NBR, Hs90)	2	AS568-122 (NBR, Hs90)
8	O-ring	1	AS568-215 (NBR, Hs90)	1	AS568-222 (NBR, Hs90)
9	O-ring	2	JIS B 2401 1B P20	2	JIS B 2401 1B P28
10	O-ring	2	JIS B 2401 1B P12	2	JIS B 2401 1B P12
11	O-ring	1	AS568-011 (NBR, Hs90)	5	AS568-011 (NBR, Hs90)
12	Backup ring	4	Bias cut for AS568-020	4	Bias cut for AS568-122